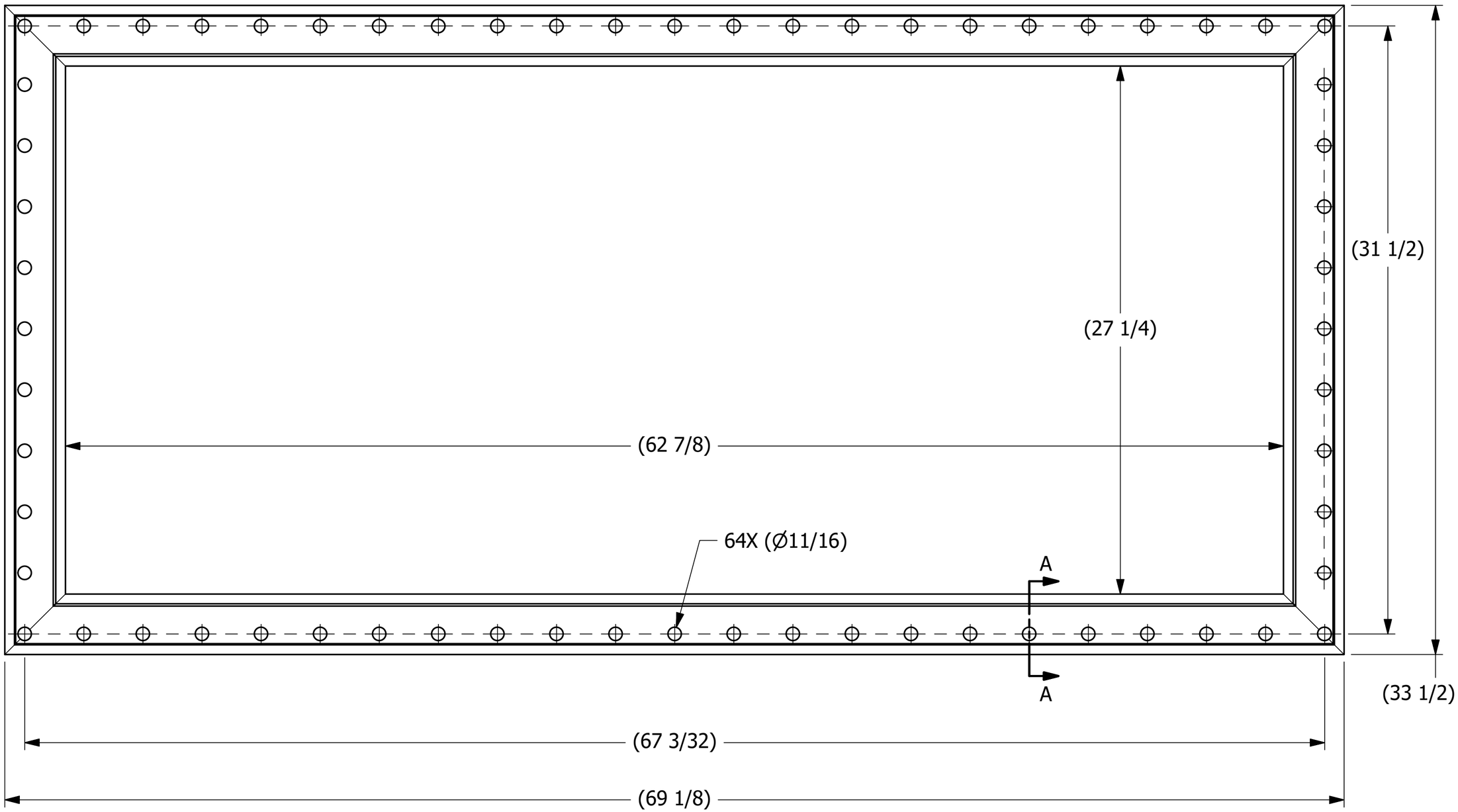

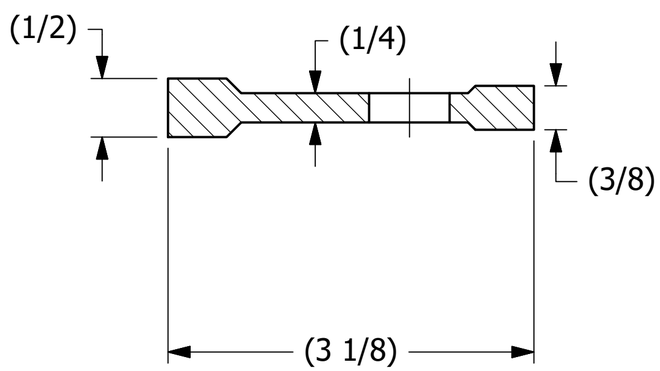

SECTION A-A
SCALE 1 : 1

SALES DRAWING SALES DRAWING SALES DRAWING
SALES DRAWING SALES DRAWING SALES DRAWING

REV	BY	DATE	REF #	PUB
B	CHL	3/4/22	202203040725	CHL

UNLESS OTHERWISE SPECIFIED DIMENSIONAL TOLERANCES
FRACTIONAL: ±1/16
X.XX: ±.03
X.XXX: ±.015
ANGLE: ±1°
DEBURR ALL SHARP EDGES. ALL MACHINED SURFACES TO HAVE A 125 RMS FINISH UNLESS NOTED OTHERWISE.
THIRD ANGLE PROJECTION

DRAWN BY:	BJC
CHECKED BY:	
PROTOTYPE DATE:	2/8/1994
APPROVED FOR PRODUCTION BY:	BJC
PRODUCTION DATE:	2/8/1994
SIZE:	C
DRAWING #:	5607

SALCO PRODUCTS, INC.

PART NAME: GATE GASKET

MATERIAL: WHITE FDA VINYL DURO. 65±5 SHORE A

PROJECT #:

SHEET #: 1 OF 1

SCALE: 1:4

PART #: GG1342M

THIS PRINT, PROPERTY OF SALCO PRODUCTS INC, CONTAINS PROPRIETARY INFORMATION AND MUST NOT BE COPIED, REPRODUCED, OR USED DETRIMENTALLY TO OUR INTEREST.